California Environmental Protection Agency

Air Resources Board

Vapor Recovery Test Procedure

TP-201.1B

Static Torque of Rotatable Phase I Adaptors

Adopted: July 3, 2002
Amended: October 8, 2003

California Environmental Protection Agency
Air Resources Board

Vapor Recovery Test Procedure

TP-201.1B

Static Torque of Rotatable Phase I Adaptors

Definitions common to all certification and test procedures are in:

D-200 Definitions for Vapor Recovery Procedures

For the purpose of this procedure, the term "CARB" refers to the California Air Resources Board, and the term "Executive Officer" refers to the CARB Executive Officer, or his or her authorized representative or designate.

1. PURPOSE AND APPLICABILITY

The purpose of this procedure is to quantify the amount of static torque required to start the movement of a rotatable Phase I adaptor and to ensure 360-degree rotation. This procedure determines compliance with the performance specifications set forth in Section 3 of CP-201 Vapor Recovery Certification Procedure.

2. PRINCIPLE AND SUMMARY OF TEST PROCEDURE

A compatible dust cap is installed on a rotatable Phase I adaptor. A Torque Test Tool is installed on the dust cap. A socket wrench is installed on the Torque Test Tool and 360-degree rotation is verified. Following the rotation test, a torque wrench is installed on the Torque Test Tool and three static torque measurements are taken. If the resulting, average static torque is less than, or equal to, the maximum allowable value specified in Certification Procedure 201 (CP-201), the adaptor is verified to be in compliance.

3. BIASES AND INTERFERENCES

3.1 Missing or defective gaskets in the dust cap may bias the results towards compliance as a dust cap may slip on the rotatable adaptor prior to the adaptor rotating. This bias is eliminated by ensuring that the dust cap seal is securely in place and does not show signs of excessive wear or damage.

3.2 Gasoline or other lubricants on the sealing surface of the rotatable adaptor or the dust cap seal can cause the dust cap to slip and may bias the results towards compliance. This bias is eliminated by ensuring that the sealing surface of the rotatable adaptor and dust cap is clean, dry and free of lubricants.

4. SENSITIVITY, RANGE, AND PRECISION

4.1 Torque Wrench. The maximum full-scale range shall be 250 pound-inches with minimum accuracy of 3.0 percent full-scale and minimum readability of 5 pound-inch increments. The torque wrench shall incorporate a mechanism, such as a tell-tale needle that identifies the maximum applied torque during each measurement.

5. EQUIPMENT

5.1 Torque Wrench. Use a Snap-On® Model TER12FUA Torque Wrench, or equivalent, to measure the static torque of the rotatable adaptor.

5.2 Static Torque Test Assembly. Use a compatible dust cap and rotatable adaptor Torque Test Tool, Phil-Tite® Part Number 6004, or equivalent. A depiction of a Torque Test Tool is shown in Figure 1. An example of a Static Torque Test Assembly is shown in Figure 2.

5.3 Socket wrench and socket extension. Use a $^{3}/_{8}$ inch or ½ inch socket wrench, adaptors and socket extension (if needed) to verify 360-degree rotation or to conduct static torque testing. The socket extension shall not exceed 12 inches in length.

Figure 1
Phil-Tite® Torque Test Tool

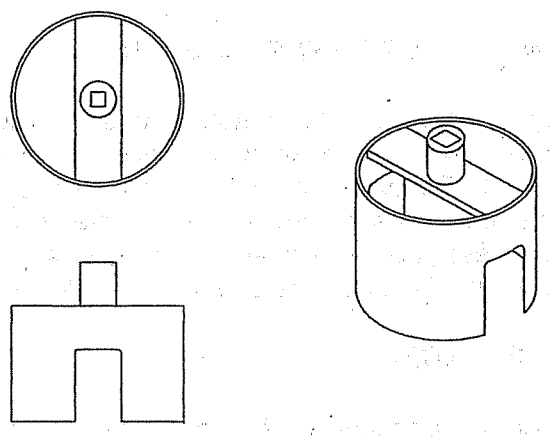

Figure 2
Static Torque Test Assembly

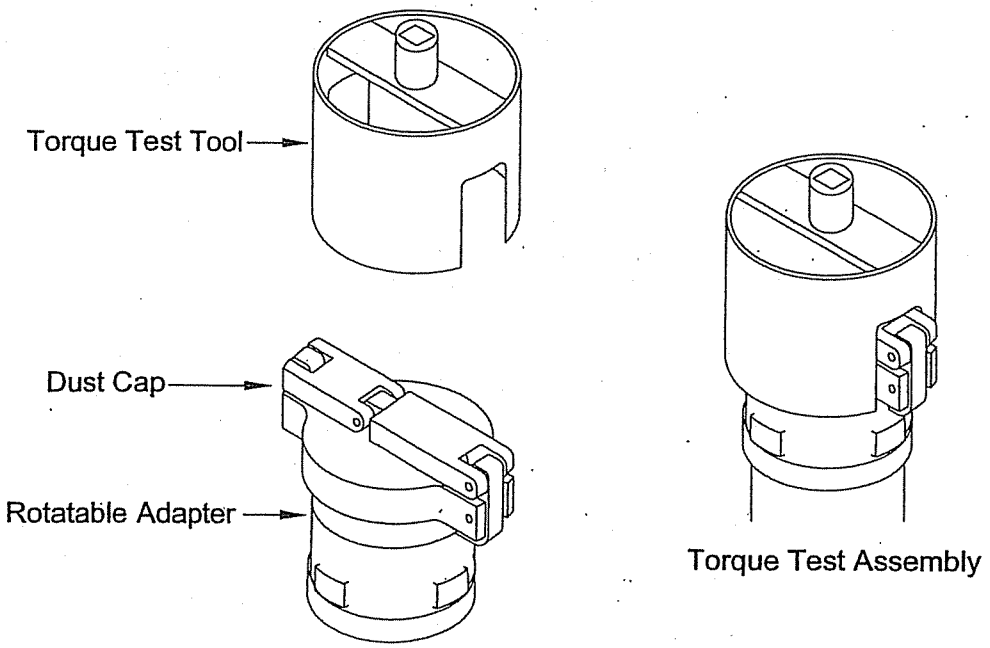

6. PRE-TEST PROCEDURES

6.1 Remove the lids of the Phase I spill containers. Visually determine that the adaptors are of the rotatable design.

6.2 Inspect the dust caps to ensure that the caps and that the gaskets are intact and do not show signs of excessive wear or damage.

6.3 Inspect the rotatable adaptors. If the adaptors are wet or covered with a lubricant, wipe the adaptors clean to ensure maximum friction between the dust cap and the adaptor seal surface.

7. TEST PROCEDURE

7.1 Install the dust cap on the Phase I rotatable adaptor.

7.2 Install the Torque Test Tool on the dust cap as shown in Figure 2.

7.3 Verification of rotation, conducted prior to the Static Torque Test. Place a socket wrench with socket extension (if required) into the Torque Test Tool, or equivalent. Rotate the adaptor a minimum of 360 degrees. Do not continue with static torque measurements if the adaptor does not rotate 360 degrees. Record the result on the data sheet where provided.

7.4 Install the Torque Wrench into the Torque Test Tool. If the spill container is too deep to allow connection of the Torque Wrench, use a compatible socket extension to reach into the bucket to the Torque Test Tool. The socket extension shall not exceed 12 inches in length.

7.5 Place one hand on top of the Torque Wrench, directly above the center of the Torque Test Tool to keep the wrench level while applying pressure. Gently apply an even, steady pressure just until the adaptor begins to rotate. Record the maximum applied static torque value shown on the torque wrench and proceed to 7.6.

7.6 After the first measurement, slowly rotate the adaptor one third of full rotation (120 degrees) from the point that the first measurement was taken. Using the same technique described in 7.5, measure and record the second torque measurement.

7.7 Following the first two measurements, slowly rotate the adaptor another, one third of full rotation (120 degrees) from the second measurement location. Using the same technique as described in 7.5, measure and record the third torque measurement. Rotating the adaptor in one-third increments ensures that the average static torque is representative of the entire adaptor rotation.

8. POST-TEST PROCEDURES

8.1 Remove the Torque Test Assembly and replace the appropriate lids on each of the spill containers. Store all test equipment in a protected location to prevent damage to the equipment.

9. CALCULATING RESULTS

9.1 Calculate the arithmetic average of the three tests for each adaptor tested and record the value on the data sheet where provided.

10. REPORTING RESULTS

10.1 Report the results of the static torque measurements on the data sheet where provided. Alternate data sheets may be used provided they include the same parameters identified on Form 1.

11. ALTERNATE PROCEDURES

11.1 This procedure shall be conducted as specified. Modifications to this test procedure shall not be used to determine compliance unless prior written approval has been obtained from the Executive Officer, pursuant to Section 14 of Certification Procedure CP-201.

Form 1
Static Torque of Rotatable Phase I Adaptors

Test Company:	**Conducted By:**
Test Date:	**Facility Name:**
Facility Address:	**City:**

Measurement Units: (circle one): pound-inches pound-feet

Vapor Adaptor 1	Vapor Adaptor 2	Vapor Adaptor 3	Vapor Adaptor 4
Brand:	**Brand:**	**Brand:**	**Brand:**
Model:	**Model:**	**Model:**	**Model:**
Grade:	**Grade:**	**Grade:**	**Grade:**
Torque 1:	Torque 1:	Torque 1:	Torque 1:
Torque 2:	Torque 2:	Torque 2:	Torque 2:
Torque 3:	Torque 3:	Torque 3:	Torque 3:
Average:	**Average:**	**Average:**	**Average:**
360 Rotation: Yes / No	**360 Rotation: Yes / No**	**360 Rotation: Yes / No**	**360 Rotation: Yes / No**

Product Adaptor 1	Product Adaptor 2	Product Adaptor 3	Product Adaptor 4
Brand:	**Brand:**	**Brand:**	**Brand:**
Model:	**Model:**	**Model:**	**Model:**
Grade:	**Grade:**	**Grade:**	**Grade:**
Torque 1:	Torque 1:	Torque 1:	Torque 1:
Torque 2:	Torque 2:	Torque 2:	Torque 2:
Torque 3:	Torque 3:	Torque 3:	Torque 3:
Average:	**Average:**	**Average:**	**Average:**
360 Rotation: Yes / No	**360 Rotation: Yes / No**	**360 Rotation: Yes / No**	**360 Rotation: Yes / No**

Comments: _____